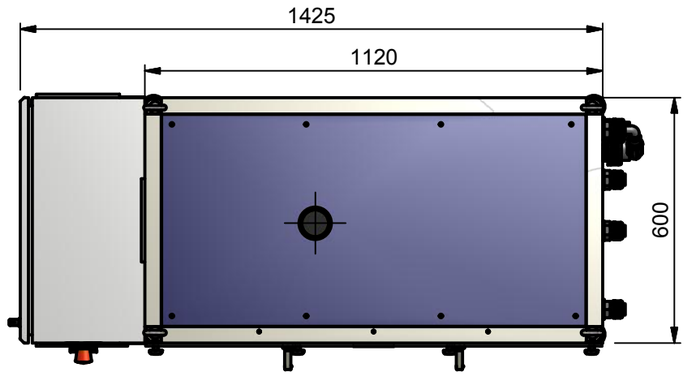

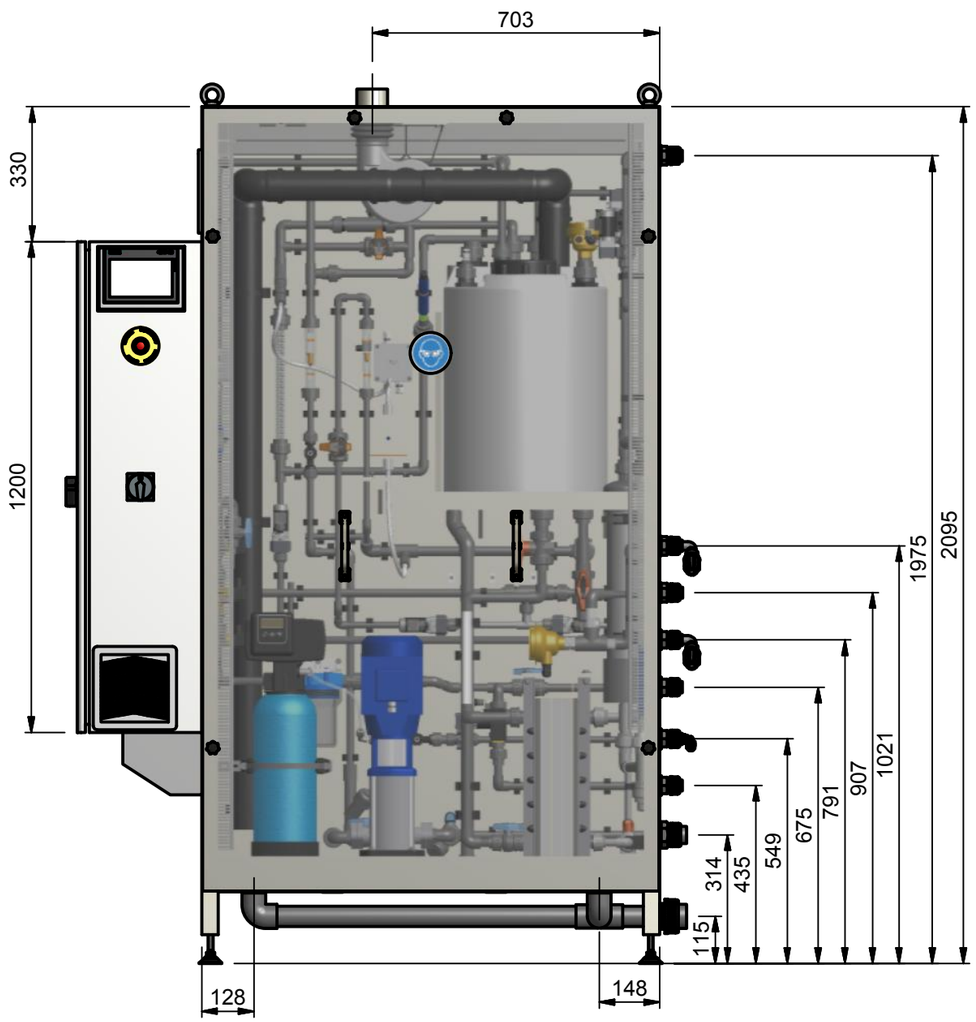

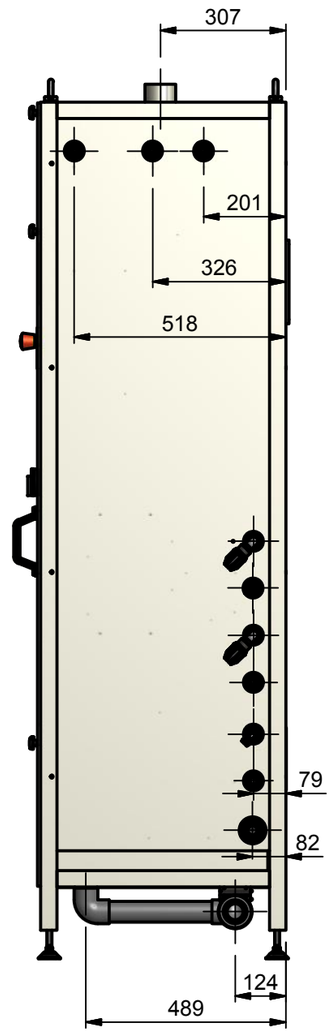

(Standard)

Nominal dimension (mm)	0-6	6-30	30-120	120-400	400-1000	ISO	Nominal pipe length (mm)	10-50	50-100	100-500	500-1000	Roughness ISO R468	M.TOL ISO R406	Break edges
Tolerance ±	±0,1	±0,2	±0,3	±0,5	±0,8	2768	Tolerance ±	±2	±5	±7	±10	Form & position tolerance ISO R1101/1		0.5 X 45°

Scale : 1:15	Version :	AM.PROJ.	Capacity installation: 100 - 300 g/h
Unit : mm	Page : 1 / 2		
Drawn : T v/d Berg		Date : 6-4-2016	
Edited : T v/d Berg		Date : 10-11-2016	

Name : Dulco®lyse

F:\Vault Workspace\Projecten\Inventor\(A) Dulcolyse 100 - 300 g-h\V3.00\03 Dulcolyse 300 g-h\Dulcolyse 300 g-h (V3.00).iam

Rev.	Description	Date	Init.
G			
F			
E			
D			
C			
B			
A			

VDH water technology
Glashorst 114
3925 BV Scherpenzeel
Postbus 71
3925 ZH Scherpenzeel
Tel: +31(0)33 2778600
E-mail: info@vdhwater.nl

Size:	Ordernumber / Drw. number:	Pag. No:
A3	80010300	0

NO PART OF THIS WORK MAY BE REPRODUCED IN ANY FORM BY PRINT,PHOTOPRINT,MICROFILM OR ANY MEANS WITHOUT WRITTEN PERMISSION FROM VAN DEN HEUVEL WATERTECHNOLOGIE BV

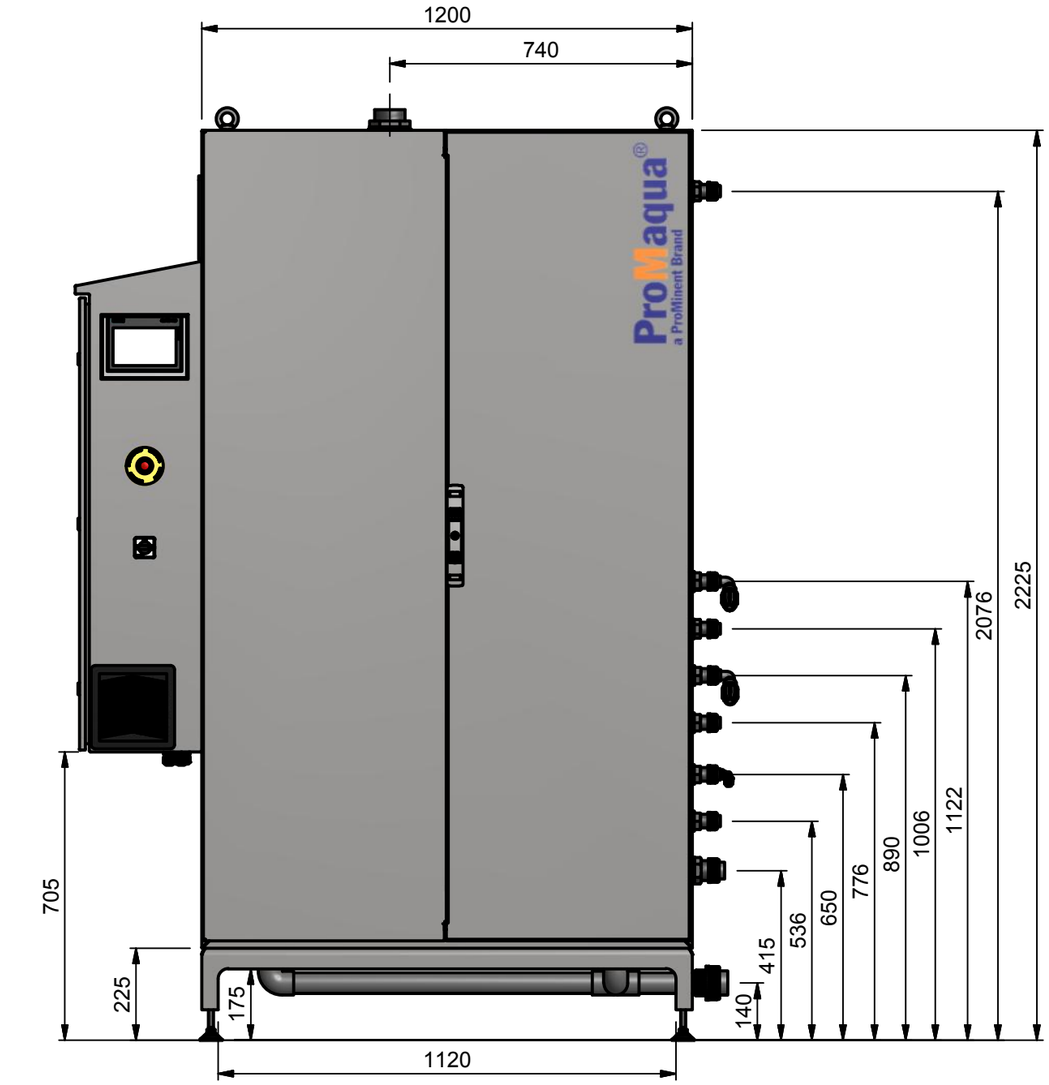

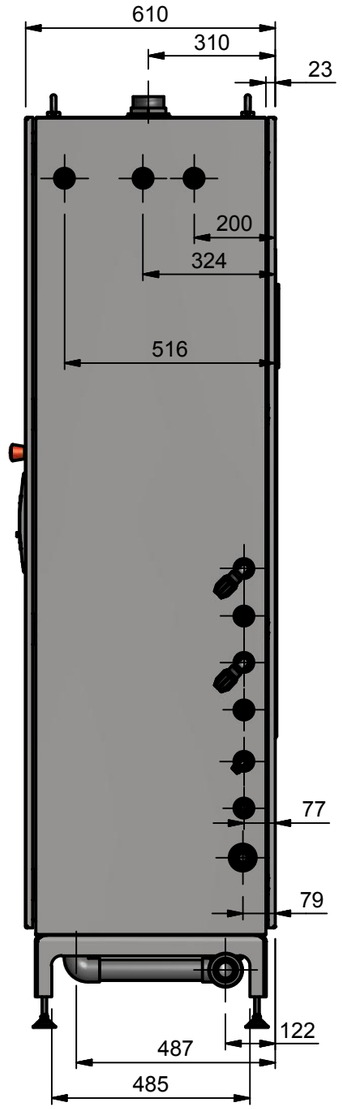

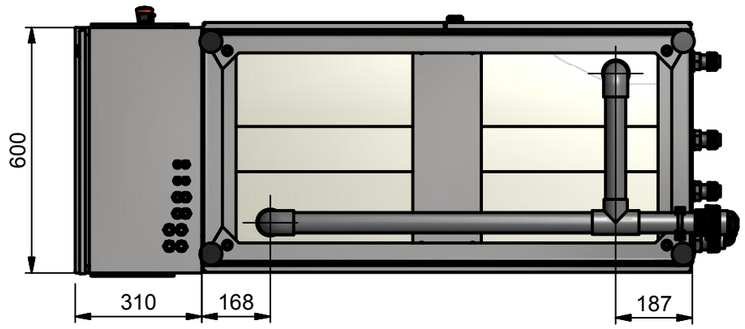

(Option 1)

Nominal dimension (mm)	0-6	6-30	30-120	120-400	400-1000	ISO	Nominal pipe length (mm)	10-50	50-100	100-500	500-1000	Roughness ISO R468	M.TOL ISO R406	Break edges
Tolerance ±	±0,1	±0,2	±0,3	±0,5	±0,8	2768	Tolerance ±	±2	±5	±7	±10	Form & position tolerance ISO R1101/1		0.5 X 45°

Scale : 1:15	Version :	AM.PROJ.	Capacity installation: 100 - 300 g/h
Unit : mm	Page : 2 / 2		
Drawn : T v/d Berg		Date : 6-4-2016	
Edited : T v/d Berg		Date : 10-11-2016	

Name : Dulco®lyse

F:\Vault Workspace\Projecten\Inventor\(A) Dulcolyse 100 - 300 g-h\V3.00\03 Dulcolyse 300 g-h\Dulcolyse 300 g-h (optie 1)(V3.00).iam

Rev.	Description	Date	Init.
G			
F			
E			
D			
C			
B			
A			

VDH water technology
Glashorst 114
3925 BV Scherpenzeel
Postbus 71
3925 ZH Scherpenzeel
Tel: +31(0)33 2778600
E-mail: info@vdhwater.nl

Size: A3 | Ordernumber / Drw. number: 80000300 | Pag. No: 0

NO PART OF THIS WORK MAY BE REPRODUCED IN ANY FORM BY PRINT,PHOTOPRINT,MICROFILM OR ANY MEANS WITHOUT WRITTEN PERMISSION FROM VAN DEN HEUVEL WATERTECHNOLOGIE BV

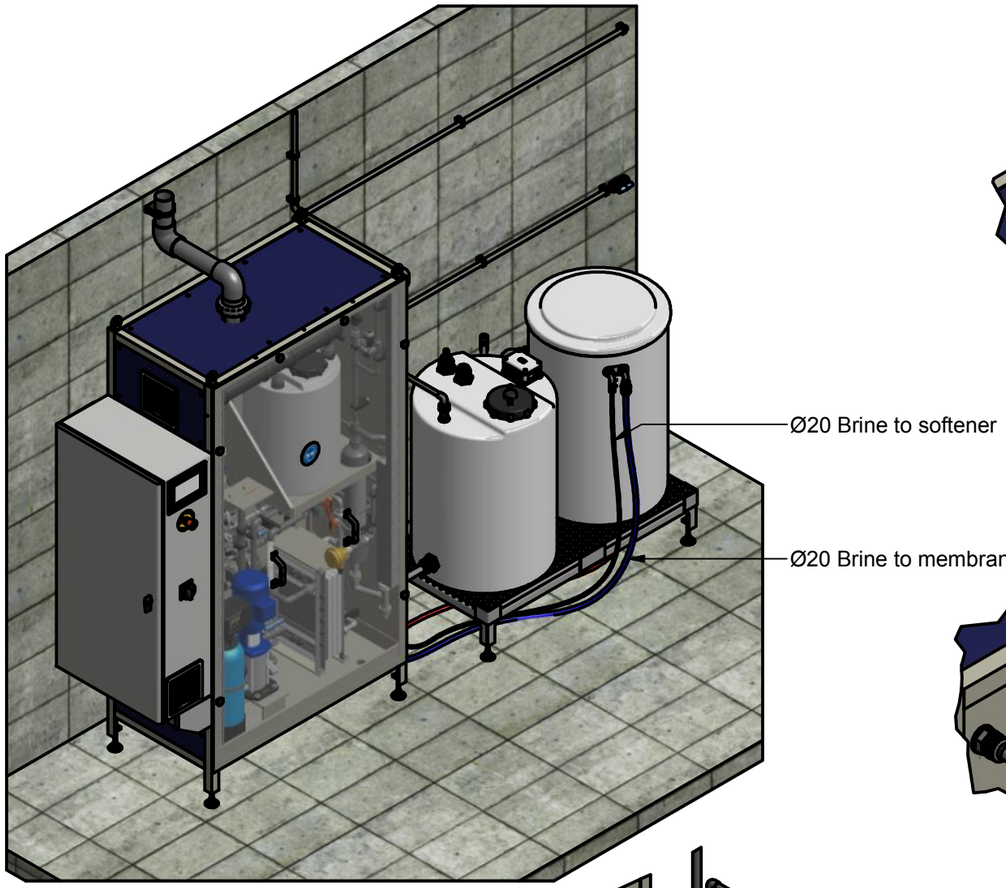

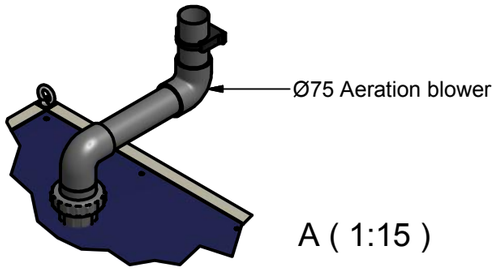

A (1:15)

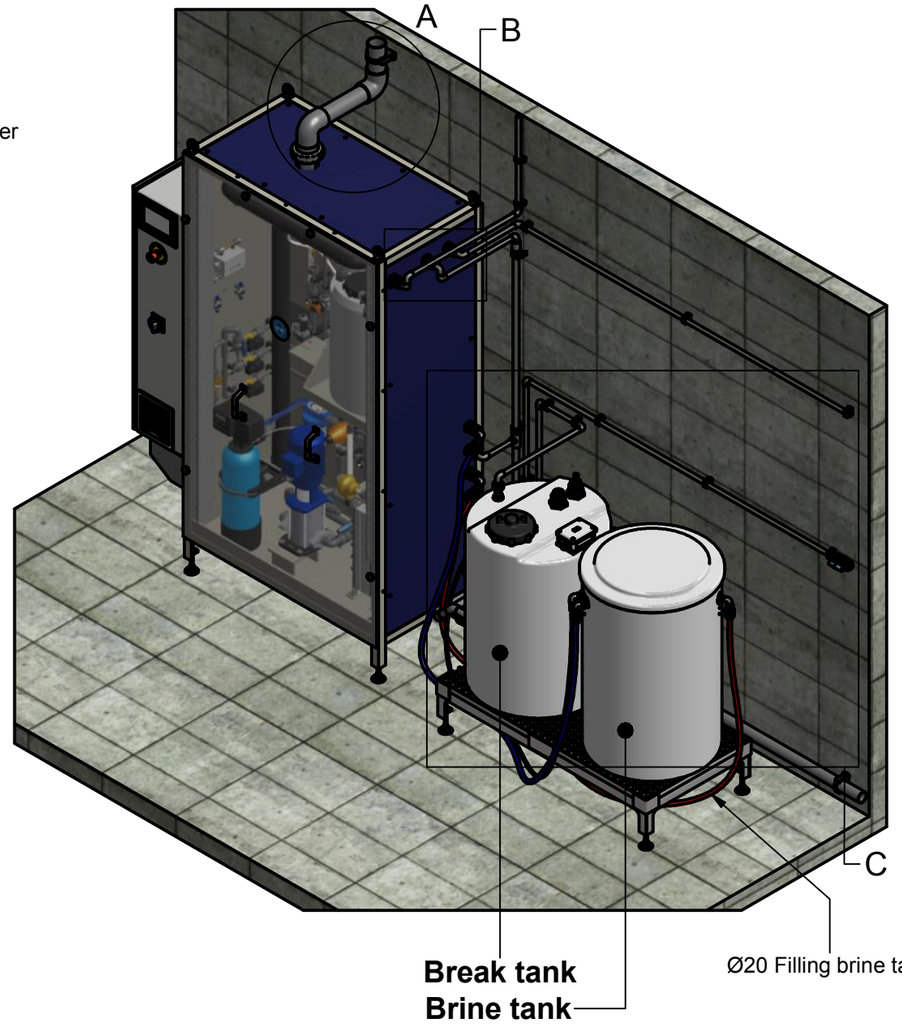

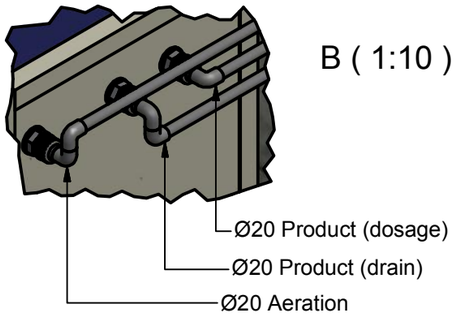

B (1:10)

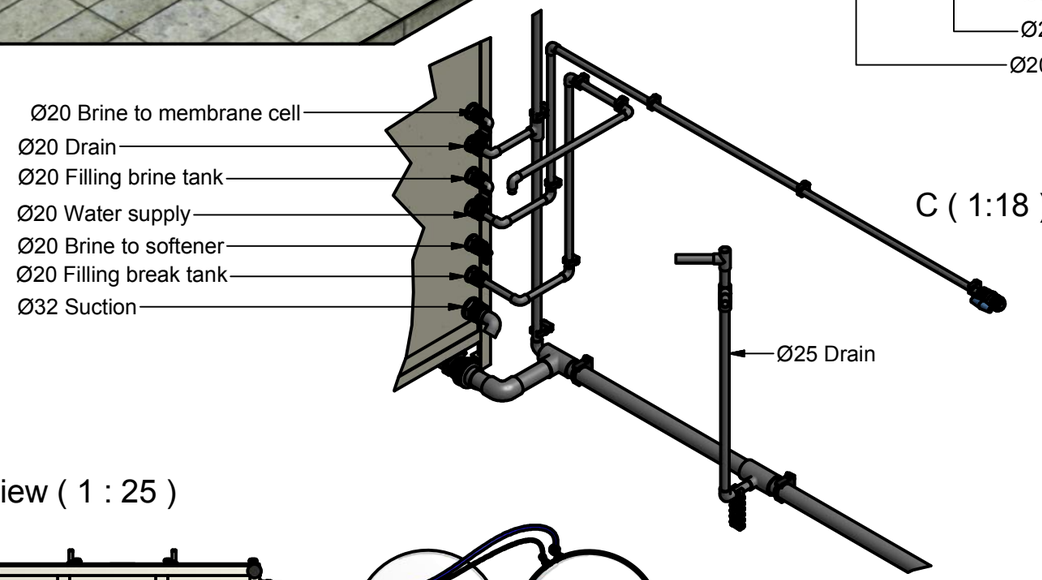

C (1:18)

The installation needs to stand with a minimum of 150mm from the wall.
This is required for good ventilation of the electrical cabinet.

Bottom view (1 : 25)

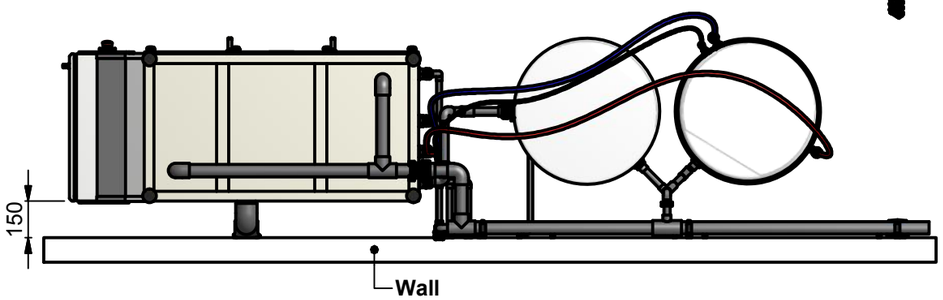

(Standard)

Nominal dimension (mm)	0-6	6-30	30-120	120-400	400-1000	ISO	Nominal pipe length (mm)	10-50	50-100	100-500	500-1000	Roughness ISO R468	M.TOL ISO R406	Break edges
Tolerance ±	±0,1	±0,2	±0,3	±0,5	±0,8	2768	Tolerance ±	±2	±5	±7	±10	Form & position tolerance ISO R1101/1		0.5 X 45°

Scale : 1:25	Version : V3.00	AM.PROJ.	Capacity installation: 100 ~ 300 g/h
Unit : mm	Page : 1 / 2		
Drawn : T v/d Berg		Date : 7-4-2016	
Edited : T v/d Berg		Date : 16-12-2016	

Name : Layout Dulco®lyse + break / Brinetank

F:\Vault Workspace\Projecten\Inventor\(A) Dulcolyse 100 - 300 g-h\V3.00\000 Opstelling\Opstelling Dulcolyse 100 - 300 g-h + cel (V3.00).iam

Rev.	Description	Date	Init.
G			
F			
E			
D			
C			
B			
A			

VDH water technology
Glashorst 114
3925 BV Scherpenzeel
Postbus 71
3925 ZH Scherpenzeel
Tel: +31(0)33 2778600
E-mail: info@vdhwater.nl

Size: A3 | Ordernumber / Drw. number: 80010300 | Pag. No: 00

NO PART OF THIS WORK MAY BE REPRODUCED IN ANY FORM BY PRINT,PHOTOPRINT,MICROFILM OR ANY MEANS WITHOUT WRITTEN PERMISSION FROM VAN DEN HEUVEL WATERTECHNOLOGIE BV

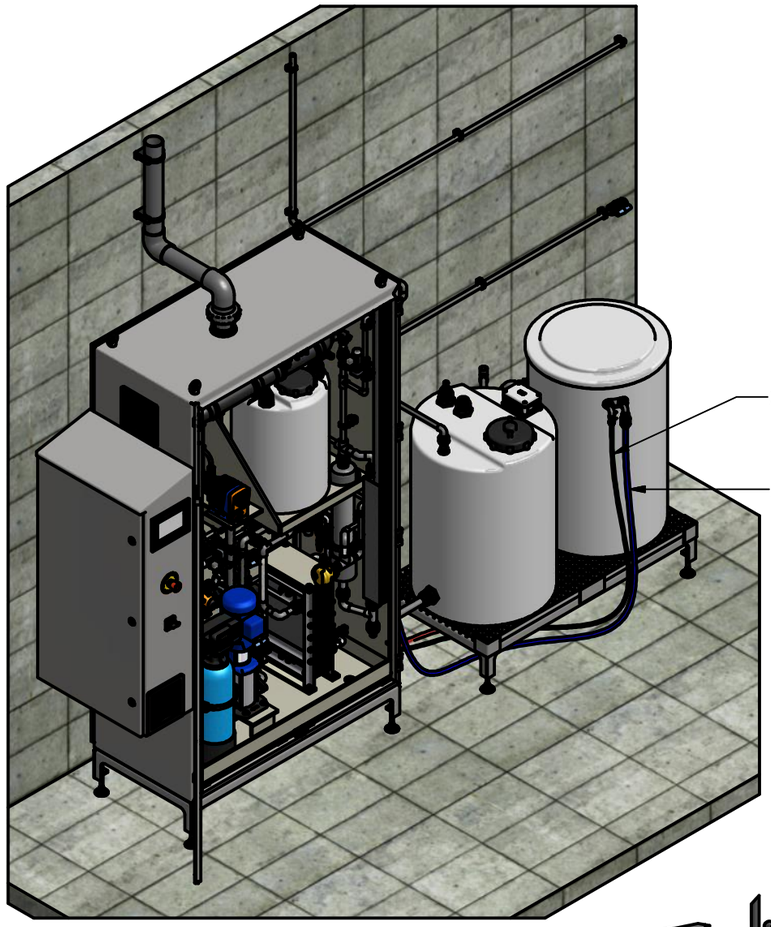

A (1:15)

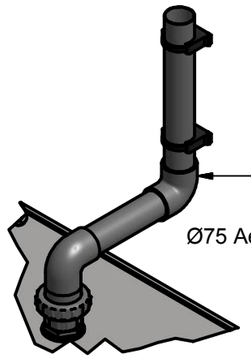

B (1:10)

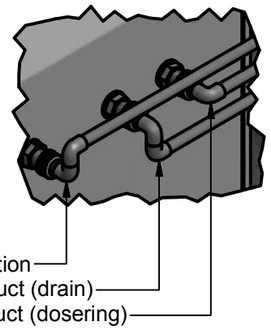

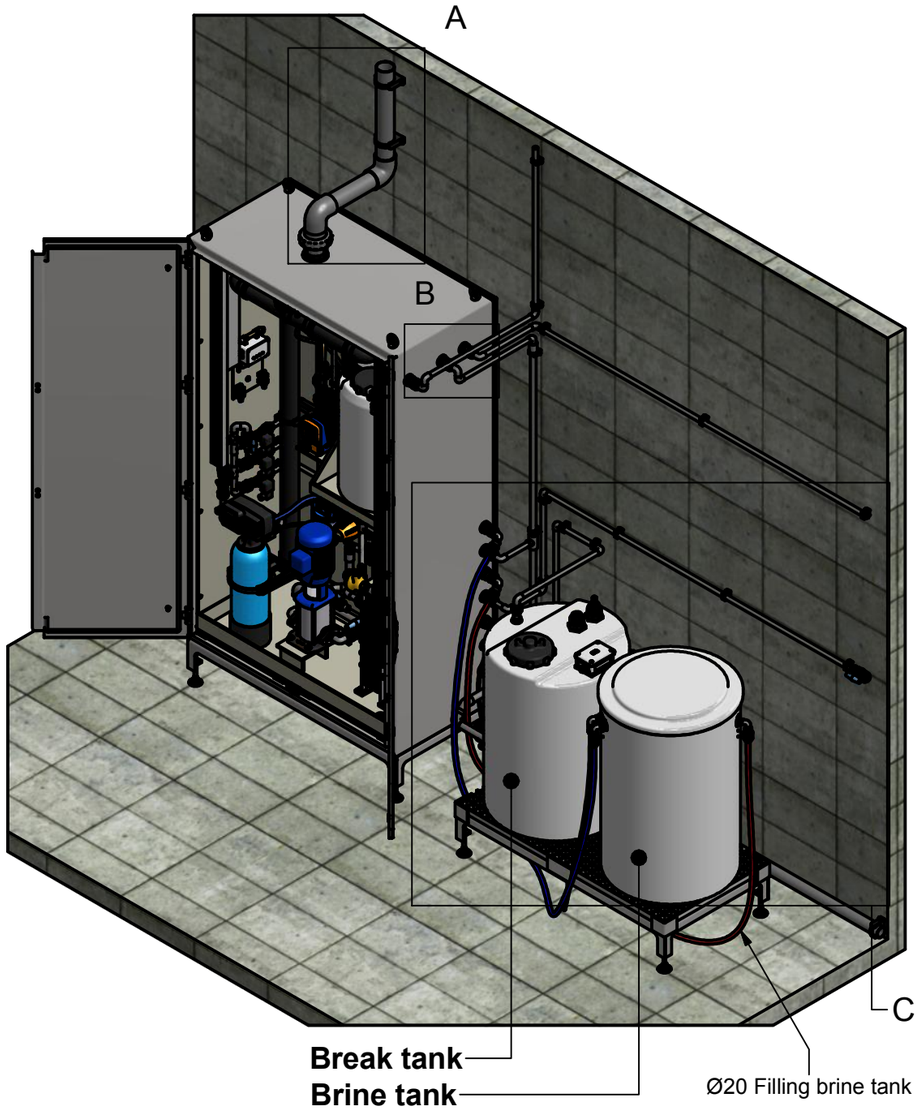

C (1:20)

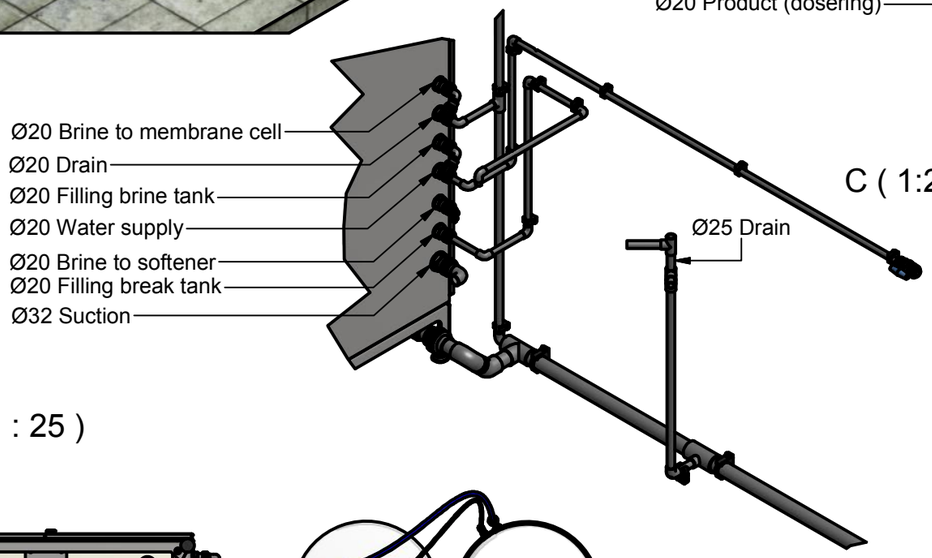

Bottom view (1 : 25)

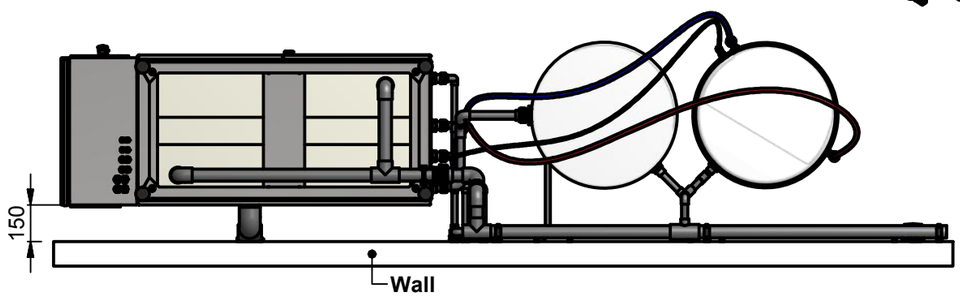

(Option 1)

The installation needs to stand with a minimum of 150mm from the wall.
This is required for good ventilation of the electrical cabinet.

Nominal dimension (mm)	0-6	6-30	30-120	120-400	400-1000	ISO	Nominal pipe length (mm)	10-50	50-100	100-500	500-1000	Roughness ISO R468	M.TOL ISO R406	Break edges
Tolerance ±	±0,1	±0,2	±0,3	±0,5	±0,8	2768	Tolerance ±	±2	±5	±7	±10	Form & position tolerance ISO R1101/1		0.5 X 45°

Scale : 1:25	Version : V3.00	AM.PROJ.	Capacity installation: 100 ~ 300 g/h
Unit : mm	Page : 2 / 2		
Drawn : T v/d Berg		Date : 7-4-2016	
Edited : T v/d Berg		Date : 16-12-2016	

Name :
Layout Dulco®lyse + break / Brinetank

F:\Vault Workspace\Projecten\Inventor\(A) Dulcolyse 100 - 300 g-h\V3.00\000 Opstelling\Opstelling Dulcolyse 100 - 300 g-h + cel (optie 1)(V3.00).iam

Rev.	Description	Date	Init.
G			
F			
E			
D			
C			
B			
A			

VDH water technology
Glashorst 114
3925 BV Scherpenzeel
Postbus 71
3925 ZH Scherpenzeel
Tel: +31(0)33 2778600
E-mail: info@vdhwater.nl

Size: A3
Ordernumber / Drw. number: 80010300
Pag. No: 00

NO PART OF THIS WORK MAY BE REPRODUCED IN ANY FORM BY PRINT,PHOTOPRINT,MICROFILM OR ANY MEANS WITHOUT WRITTEN PERMISSION FROM VAN DEN HEUVEL WATERTECHNOLOGIE BV